Air Purifiers and True HEPA Filters Certification

Sharp Hygiene Air Purifiers are supplied with H13 True HEPA filters which are certified to comply with EN1822:2019.

Sharp Hygiene supplies two Air Purifiers and two Replacement Filter Packs to customers in Ireland and the UK.

- SHAP099: True H13 HEPA Filter Air Purifier – 99m2
- SHAP120: True H13 HEPA Filter Air Purifier – 120m2
- SHAPF099: 99m2 Purifier Replacement Filter Pack
- SHAPF120: 120m2 Purifier Replacement Filter Pack

The Air Purifiers are supplied with Air Filter Packs which are manufactured by or under the license of Winix.

- Filter ID: HERA 33T
- Description: HEPA Filter for Winix Zero

The replacement filter packs are the same as those supplied with the Air Purifiers.

The below test and certification information is for all products listed above.

If you have any questions or need more information, please contact us.

August 19, 2021

LMS#7296

EN1822 European HEPA Test
LMS Technologies, Inc.

6423 Cecilia Circle
Bloomington, MN 55439

Tel.: (952)-918-9060
Fax: (952) 918-9061

Test Type :	EN1822	**Test Requested By:**	WINIX
Test Number:	T081921A	**Filter Mfgr:**	Clean & Science Co., Ltd
Flow Rate/Velocity:	**116.5 cfm**	**Filter ID # :**	**HERA 33T**
Test Aerosol:	DEHS, Neutralized	**Filter Description:**	HEPA Filter for WINIX ZERO
ΔP ("H2O):	0.377", 94.2 pascal	**Filter Size:**	16" x 12" x 1"
		For WINIX quality control	

Classification: **H13**

Size Rang(μm)	**Initial** Fractional Efficiency(%)
0.0165	99.998
0.0190	99.995
0.0221	99.999
0.0255	100.000
0.0294	100.000
0.0340	100.000
0.0392	100.000
0.0453	99.996
0.0523	99.991
0.0604	99.990
0.0698	99.987
0.0806	**99.986**
0.0931	99.989
0.1075	99.991
0.1241	99.992
0.1433	99.995
0.1655	99.993
0.1911	99.995
0.2207	99.996
0.2548	99.998
0.2943	99.995
0.3398	99.997
0.3924	99.996
0.4532	99.998
0.5233	99.999
0.6043	100.000

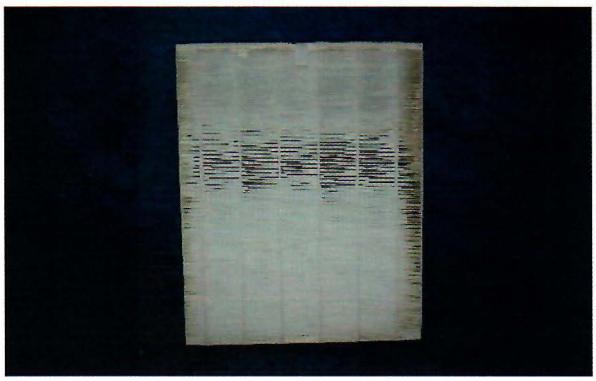

Efficiency at most penetrating particle size: **99.986% @ 0.0806 μm**

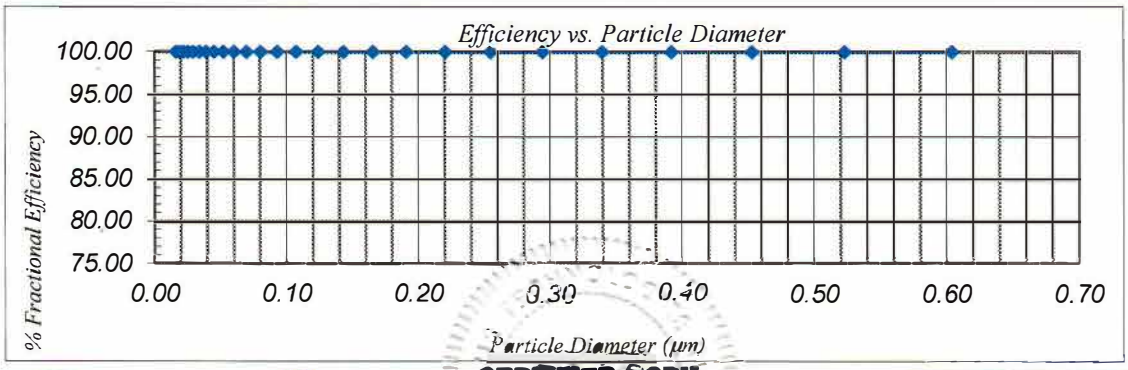

TEST SUPERVISOR
EMILE TADROS_____

CERTIFIED COPY
LMS TECHNOLOGIES, INC.

ENGINEERING APPROVAL
K.C. KWOK, PH.D._____

Institut für Energie- und Umwelttechnik e. V. (IUTA)

Air Quality & Filtration

Bliersheimer Straße 58-60

47229 Duisburg

Germany

Dr.-Ing. Christof Asbach

Dr. rer. nat. Ana Maria Todea

IUTA report UN2-201208-T5599900-334

Measurement of the deposition efficiency of I type filter for 0.003 µm NaCl particles

Customer:	IUTA, Managing Director
Winix Sangdeuk Son (Cris) 6, Haogae-ro 344 beon-gil, Bundangu-gu, Seongnam-si, Gyeonggi-do, 13455 Korea	Dr.-Ing. Stefan Haep Institut für Energie- und Umwelttechnik e.V. (IUTA) Bliersheimer Straße 60 47229 Duisburg Duisburg, April 21st, 2021

IUTA – Data report

UN2-201208-T5599900-334

Laboratory

Institut für Energie- und Umwelttechnik e.V.

IUTA • Bliersheimer Straße 58 - 60 • 47229 Duisburg Germany

Phone: +49-(0)2065 / 418-209

E-Mail: info@iuta.de

Internet: www.iuta.de

IUTA-Contact: Dr. rer. nat. Ana Maria Todea, Scientific staff

Department: Air Quality & Filtration Date: April 21st, 2021

IUTA quotation No.:	UN2-201208-T5599900-334
Date of quotation:	December 08th, 2020
Order reference code:	Prepayment, Invoice no. T5599900-20-6166
Date of order:	January 18th 2021
Type of sample:	Air filter
Sample denomination customer:	I
Sample arrival date:	January, 04th 2021
Number of samples:	3
Staff members employed:	Dr. rer. nat. Ana Maria Todea
Laboratory site:	Duisburg
Period of services:	18.01.2021 - 21.04.2021
Length of report:	11 pages

Revisions

None

1. Table of content

2. List of figures

3. List of tables

4. Introduction

Three filters of the type I were delivered by Winix to be tested at IUTA. The requirement set by the customer was that the deposition efficiency for 0.003 µm NaCl particles of one filter, at a face velocity corresponding to a flow rate of 6.7 CMM through the whole filter, should be determined.

5. Experimental set up

Figure 1 and *Figure 2* show the experimental set up used to generate the test aerosol and determine the deposition efficiency of the filter for 0.003 µm NaCl particles. A nanoparticle generator (model FG2, MoTec Konzepte, Bochum, Germany, no. 1361) with flame-based dissociation of an aqueous NaCl precursor solution was used to generate the desired NaCl aerosol. A 0.5 g/L NaCl precursor solution was fed with a syringe pump into the generator with a feed rate of 50 ml/h. The generated NaCl aerosol was fed into a large filter test rig according to ISO 16890, where it was mixed with 4000 m^3/h dilution air. The immediate strong dilution quenches the aerosol formation process and avoids further particle growth. The test rig is equipped with a conditioning system, which keeps the temperature and relative humidity of the test aerosol constant. During the measurement the temperature in the ISO 16890 test rig was kept around 23 °C, while the relative humidity was kept under 40 % and therefore below the deliquescence point for NaCl to avoid water uptake by the NaCl particles. Also the aerosol flow in the ISO 16890 test rig was kept constant, thus ensuring a constant particle size and number concentration of the aerosol during the filter test. The necessary test aerosol was withdrawn from the ISO 16890 test rig at the required flow rate and introduced into the second test rig, designed for testing cabin air filters according to DIN 71460-1/ ISO/TS 11155-1, containing the filter to be tested. The particle size distribution of the test aerosol was measured with an Electrostatic Classifier (TSI model 3080, no. 1346) coupled with an Ultrafine Condensation Particle Counter (UCPC, TSI model 3776, no. 1354). The Electrostatic Classifier uses a Nanometer Differential Mobility Analyzer (nanoDMA TSI, model 3085, no. 1355) to classify the particles according to their electrical mobility, which is related to the particle size. Before performing the measurement, the filter was static conditioned for 48 h at rh = 50 % and T = 23° C.

The size of the filter was adapted to the size of the test rig and correspondingly the test flow rate was decreased to 5.7 CMM, in order to have the same face velocity as with a flow rate of 6.7 CMM through the whole filter.

In order to determine the deposition efficiency of the investigated filter for 0.003 µm NaCl particles, only the concentration of the particles with this size was measured both in raw and

clean gas. To do so, the Electrostatic Classifier was set to a fixed size mode to classify only the particles with an electrical mobility diameter of 0.003 µm. The nanoDMA was operated at 1.5 L/min aerosol flow and 10.5 L/min sheath flow rate. The number of the classified 0.003 µm particles was measured with the UCPC downstream of the nanoDMA. Three consecutive measurements raw gas/clean gas/raw gas were performed. Each clean gas measurement lasted ~20 min.

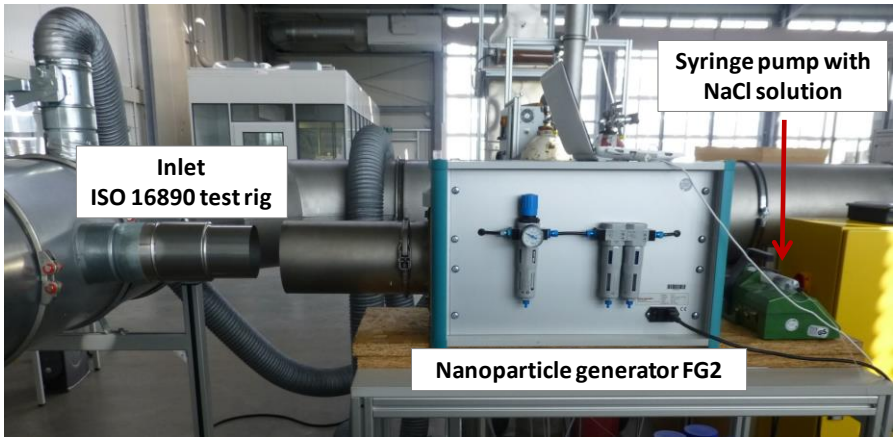

Figure 1: Experimental set up used to generate the NaCl test aerosol.

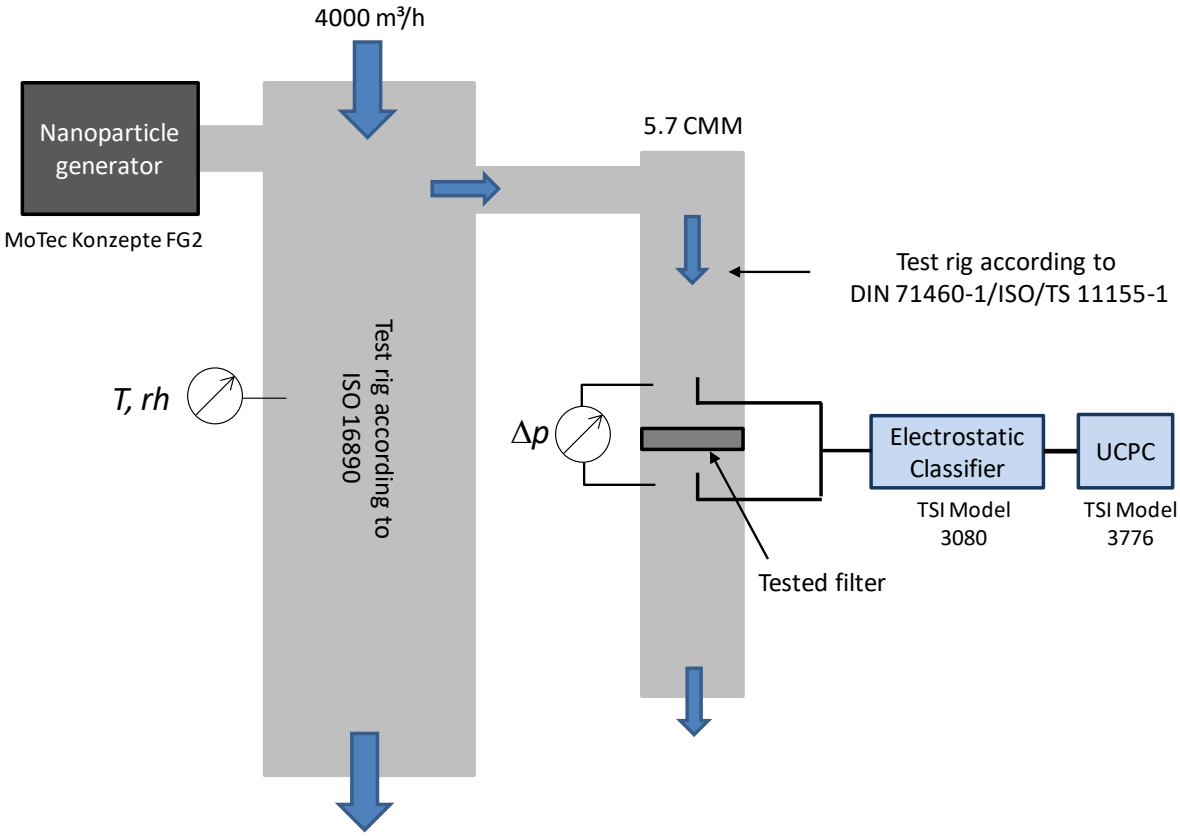

Figure 2: Schematic of the experimental set up used to determine the deposition efficiency of the tested filter for 0.003 µm NaCl particles.

Before the filter test the UCPC was zero checked with a HEPA filter (>99.97 % efficiency @ 0.3 µm). Prior to the measurement with NaCl particles, the filter was stabilized to temperature and humidity test conditions for 20 min, by flushing the filter only with dilution air. During these 20 minutes the 0.003 µm particles concentration was measured in the clean gas. This measurement would identify any leakages in the measurement system and clean gas sampling train, as expected raw gas 0.003 µm particles concentrations are < 1#/cm³. Thus, depending on the efficiency of the tested filter, only few particles should be counted in the clean gas. During the 20 min clean gas measurement, zero particles were counted by the UCPC.

6. Results

To test the filter's deposition efficiency for 0.003 µm NaCl particles, a polydisperse aerosol with a modal diameter of 4.6 nm and a geometric standard deviation of 1.3 was used (see *Figure 3*). Although the majority of the particles is larger, this distribution provided a sufficient concentration of 0.003 µm particles (see *Table 1*) to determine the deposition efficiency of the investigated filter for the abovementioned particle size.

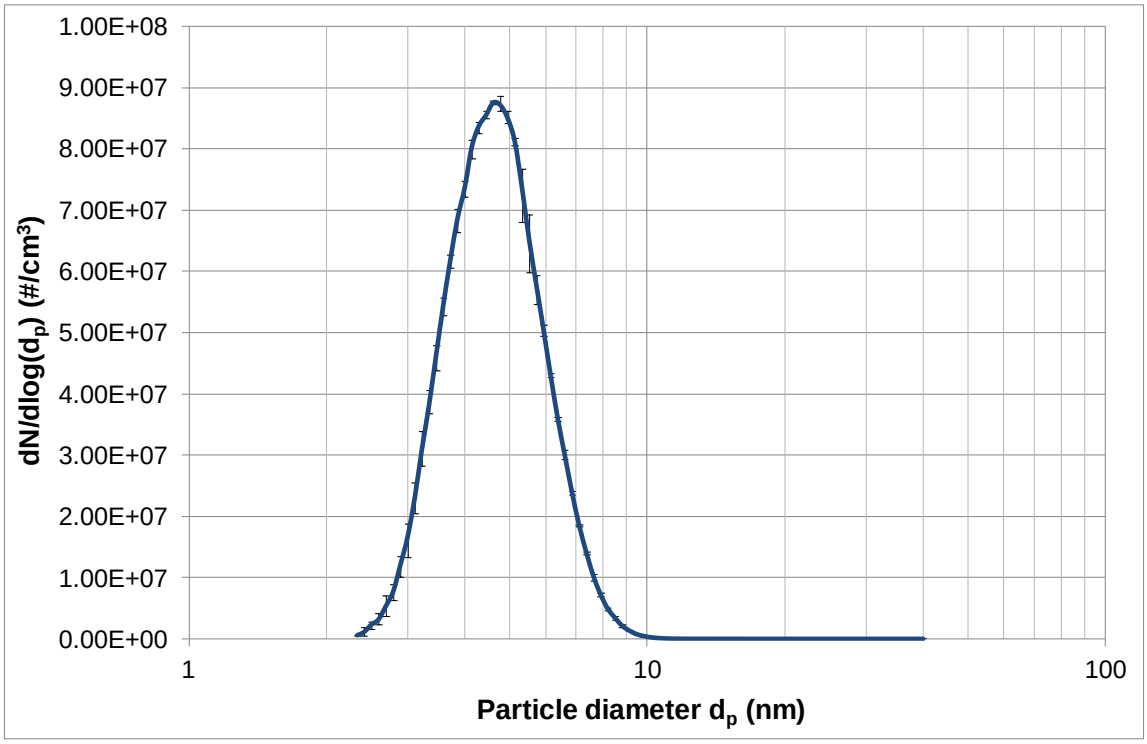

Figure 3: Particle size distribution of the NaCl test aerosol used to determine the deposition efficiency of the I type filter for 0.003 µm NaCl particles.

Table 1 lists the particle number concentrations in raw and clean gas and the particle counts in clean gas, respectively, of the 0.003 µm NaCl particles measured by the UCPC downstream

of the nanoDMA during the test with the I type filter. As the nanoDMA classifies only the monomobile positively charged particles, the concentration measured by the UCPC was divided by the charging probability of 0.003 µm particles (~ 1.1 %) to determine the total number of 0.003 µm particles present in raw and clean gas. These values, together with the deposition efficiency of the tested filter for this particle size can be found in *Table 1.*

Table 1 gives two values for the efficiency, i.e. one calculated from the measured particle counts (denominated “calculated”) and a second one taking into account the least favorable limit value of the 95 % two-sided confidence interval (denominated “minimum”) based on Poisson statistics, due to the low number of particles counted downstream of the filter. The calculation is carried out taking into account the particle counting statistics specified in DIN EN ISO 29463-2:2019-05 and is based only on pure counting data. The downstream concentration is based on the upper limit of the 95 % confidence range of the counted particles, while the upstream concentration is based on the lower limit of the 95 % confidence range of the counted particles.

The numbers of particles counted by the UCPC during each ~20 min clean gas measurement can be summed up for the tested filter and a deposition efficiency based on roughly one hour measurement can be calculated. This would correspond to 6 counts and a deposition efficiency of 99.9998 % ($E_{95\%}$ = 99.9993 %).

From *Table 1* it can be seen that the tested filter showed efficiencies >99.999 % (lower end of the 95 % confidence interval) for the 0.003 µm NaCl particles.

Table 1: Overview of the number concentration and counts of monomobile 0.003 µm NaCl particles classified by the nanoDMA and measured by the UCPC, of the total particle number in raw and clean gas and of the deposition efficiency determined for the tested I type filter for 0.003 µm NaCl particles.

Filter denomination customer/ Filter number IUTA	Raw gas		Clean gas				Efficiency	
	Concentration[1] (#/cm^3)*10^3	Particle number (#)*10^{13}	Time (s)	Counts UCPC[1] (#)	Concentration[1] (#/cm^3)*10^{-3}	Particle number (#)*10^7	Calculated (%)	Minimum[2] (%)
I M210104/007	1.02	1.05	1200	1	1.00	1.03	99.9999	99.9994
	1.08	1.11	1200	3	3.00	3.09	99.9997	99.9992
	1.12	1.15	1200	2	2.00	2.06	99.9998	99.9994

[1]The values refer only to the monomobile positively charged fraction of 0.003 µm particles behind the DMA
[2]The minimum value of the 95 % confidence interval

7. Summary

A single I type filter was tested with 0.003 µm NaCl particles. The filter was installed in a test rig according to DIN 71460-1/ISO/TS 11155-1. The size of the filter was adapted to the size of the test rig and the test flow rate was set in order to have the same face velocity as with a flow rate of 6.7 CMM through the whole filter.

A polydisperse aerosol with a geometric mean diameter of 4.6 nm and a geometric standard deviation of 1.3 was produced and the number of 0.003 µm particles both in raw and clean gas classified with a nanoDMA and counted with an UCPC.

The 0.003 µm NaCl particles removal efficiency of the tested filter I was >99.999 %.

Remark:

The test was conducted with one of the specimens of the Winix filter I type. According to the information provided by Winix, this filter type is installed in the Winix C555 Air purifier model. According to the information provided by Winix, which relies on the quality control and consistency of Winix's supply chain, the filter model mentioned in the following table corresponds to the same filter type (same fabric, geometry, size and pleating). The table also mentions the air purifier models in which the filters are installed and the corresponding maximum flow rate of the air purifier.

Filter model	Filter dimensions: length x width x height (mm^3)	Max. air-flow of product (CMM)	Filter geometry	Air purifier model
GS	415 x 321 x 25	6.7	Rectangular	AZSU330-HWV AZSU330-HWT AZSU480-IWI
GH				AZBU380-HWT
GI				AUS-1050AZBU AZBU380-IWI
A				C535 5300-2 6300-2 WINIX ZERO AM90
H				5500-2 AM80

Institut für Energie- und
Umwelttechnik e.V. (IUTA)

Dr. rer. nat. Ana Maria Todea
Responsible for the measurements

Dr.-Ing. Christof Asbach
Unit Head Air Quality & Filtration

Remarks according DIN EN ISO/IEC 17025:2018 (general criteria for the operation of testing laboratories):

1. The results are only valid for the tested filter samples.
2. Extracts of this measurement report and the method description are not allowed to be forwarded to a third party without permission of IUTA.
3. Retained filter samples are stored for one year.

Institut für Energie- und Umwelttechnik e. V. (IUTA)

Air Quality & Filtration

Bliersheimer Straße 58-60

47229 Duisburg

Germany

Dr.-Ing. Christof Asbach

Dr. rer. nat. Ana Maria Todea

IUTA report UN2-210225-T5599900-036B

Measurement of the deposition efficiency of GJ type filter for 0.003 µm NaCl particles

Customer:	IUTA, Managing Director
Winix Sangdeuk Son (Cris) 6, Haogae-ro 344 beon-gil, Bundangu-gu, Seongnam-si, Gyeonggi-do, 13455 Korea	Dr.-Ing. Stefan Haep Institut für Energie- und Umwelttechnik e.V. (IUTA) Bliersheimer Straße 60 47229 Duisburg Duisburg, April 21st, 2021

IUTA – Data report

UN2-210225-T5599900-036B

Laboratory

Institut für Energie- und Umwelttechnik e.V.

IUTA • Bliersheimer Straße 58 - 60 • 47229 Duisburg Germany

Phone: +49-(0)2065 / 418-209

E-Mail: info@iuta.de

Internet: www.iuta.de

IUTA-Contact: Dr. rer. nat. Ana Maria Todea, Scientific staff

Department: Air Quality & Filtration Date: April 21st, 2021

IUTA quotation No.:	UN2-210225-T5599900-036B
Date of quotation:	February 25th, 2021
Order reference code:	Prepayment, Invoice no. T5599900-21-5165
Date of order:	March 21st 2021
Type of sample:	Air filter
Sample denomination customer:	GJ
Sample arrival date:	March, 12th 2021
Number of samples:	3
Staff members employed:	Dr. rer. nat. Ana Maria Todea
Laboratory site:	Duisburg
Period of services:	15.03.2021 - 21.04.2021
Length of report:	11 pages

Revisions

None

1. Table of content

2. List of figures

3. List of tables

4. Introduction

Three filters of the type GJ were delivered by Winix to be tested at IUTA. The requirement set by the customer was that the deposition efficiency for 0.003 µm NaCl particles of one filter, at a face velocity corresponding to a flow rate of 6.5 CMM through the whole filter, should be determined.

5. Experimental set up

Figure 1 and *Figure 2* show the experimental set up used to generate the test aerosol and determine the deposition efficiency of the filter for 0.003 µm NaCl particles. A nanoparticle generator (model FG2, MoTec Konzepte, Bochum, Germany, no. 1361) with flame-based dissociation of an aqueous NaCl precursor solution was used to generate the desired NaCl aerosol. A 0.5 g/L NaCl precursor solution was fed with a syringe pump into the generator with a feed rate of 50 ml/h. The generated NaCl aerosol was fed into a large filter test rig according to ISO 16890, where it was mixed with 4000 m^3/h dilution air. The immediate strong dilution quenches the aerosol formation process and avoids further particle growth. The test rig is equipped with a conditioning system, which keeps the temperature and relative humidity of the test aerosol constant. During the measurement the temperature in the ISO 16890 test rig was kept around 23 °C, while the relative humidity was kept under 40 % and therefore below the deliquescence point for NaCl to avoid water uptake by the NaCl particles. Also the aerosol flow in the ISO 16890 test rig was kept constant, thus ensuring a constant particle size and number concentration of the aerosol during the filter test. The necessary test aerosol was withdrawn from the ISO 16890 test rig at the required flow rate and introduced into the second test rig, designed for testing cabin air filters according to DIN 71460-1/ ISO/TS 11155-1, containing the filter to be tested. The particle size distribution of the test aerosol was measured with an Electrostatic Classifier (TSI model 3080, no. 1346) coupled with an Ultrafine Condensation Particle Counter (UCPC, TSI model 3776, no. 1354). The Electrostatic Classifier uses a Nanometer Differential Mobility Analyzer (nanoDMA TSI, model 3085, no. 1355) to classify the particles according to their electrical mobility, which is related to the particle size. Before performing the measurement, the filter was static conditioned for 48 h at rh = 50 % and T = 23° C.

The size of the filter was adapted to the size of the test rig and correspondingly the test flow rate was decreased to 5.35 CMM, in order to have the same face velocity as with a flow rate of 6.5 CMM through the whole filter.

In order to determine the deposition efficiency of the investigated filter for 0.003 µm NaCl particles, only the concentration of the particles with this size was measured both in raw and

clean gas. To do so, the Electrostatic Classifier was set to a fixed size mode to classify only the particles with an electrical mobility diameter of 0.003 µm. The nanoDMA was operated at 1.5 L/min aerosol flow and 10.5 L/min sheath flow rate. The number of the classified 0.003 µm particles was measured with the UCPC downstream of the nanoDMA. Three consecutive measurements raw gas/clean gas/raw gas were performed. Each clean gas measurement lasted ~20 min.

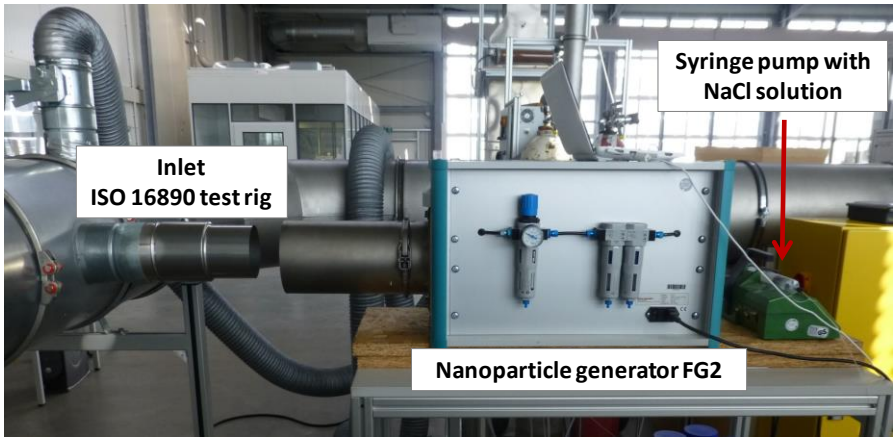

Figure 1: Experimental set up used to generate the NaCl test aerosol.

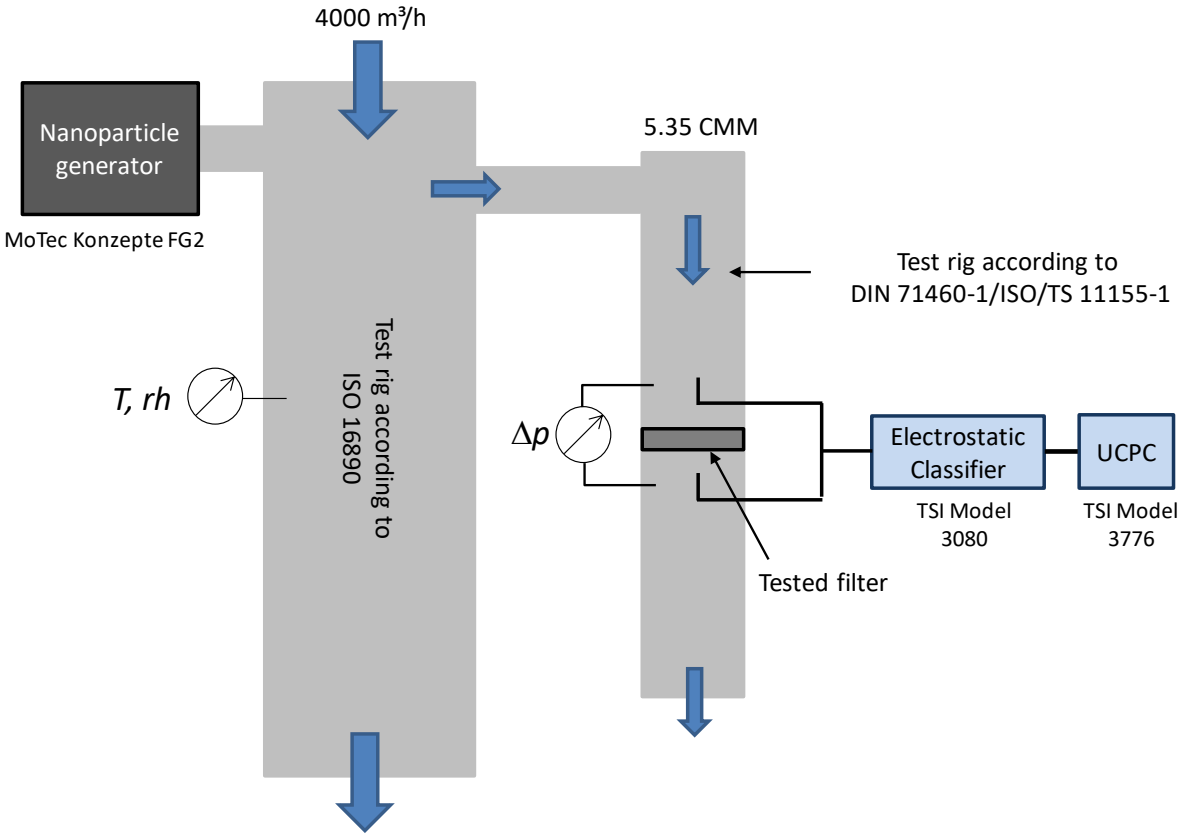

Figure 2: Schematic of the experimental set up used to determine the deposition efficiency of the tested filter for 0.003 µm NaCl particles.

Before the filter test the UCPC was zero checked with a HEPA filter (>99.97 % efficiency @ 0.3 µm). Prior to the measurement with NaCl particles, the filter was stabilized to temperature and humidity test conditions for 20 min, by flushing the filter only with dilution air. During these 20 minutes the 0.003 µm particles concentration was measured in the clean gas. This measurement would identify any leakages in the measurement system and clean gas sampling train, as expected raw gas 0.003 µm particles concentrations are < 1#/cm³. Thus, depending on the efficiency of the tested filter, only few particles should be counted in the clean gas. During the 20 min clean gas measurement, one particle was counted by the UCPC.

6. Results

To test the filter's deposition efficiency for 0.003 µm NaCl particles, a polydisperse aerosol with a modal diameter of 3.6 nm and a geometric standard deviation of 1.3 was used (see *Figure 3*). Although the majority of the particles is larger, this distribution provided a sufficient concentration of 0.003 µm particles (see *Table 1*) to determine the deposition efficiency of the investigated filter for the abovementioned particle size.

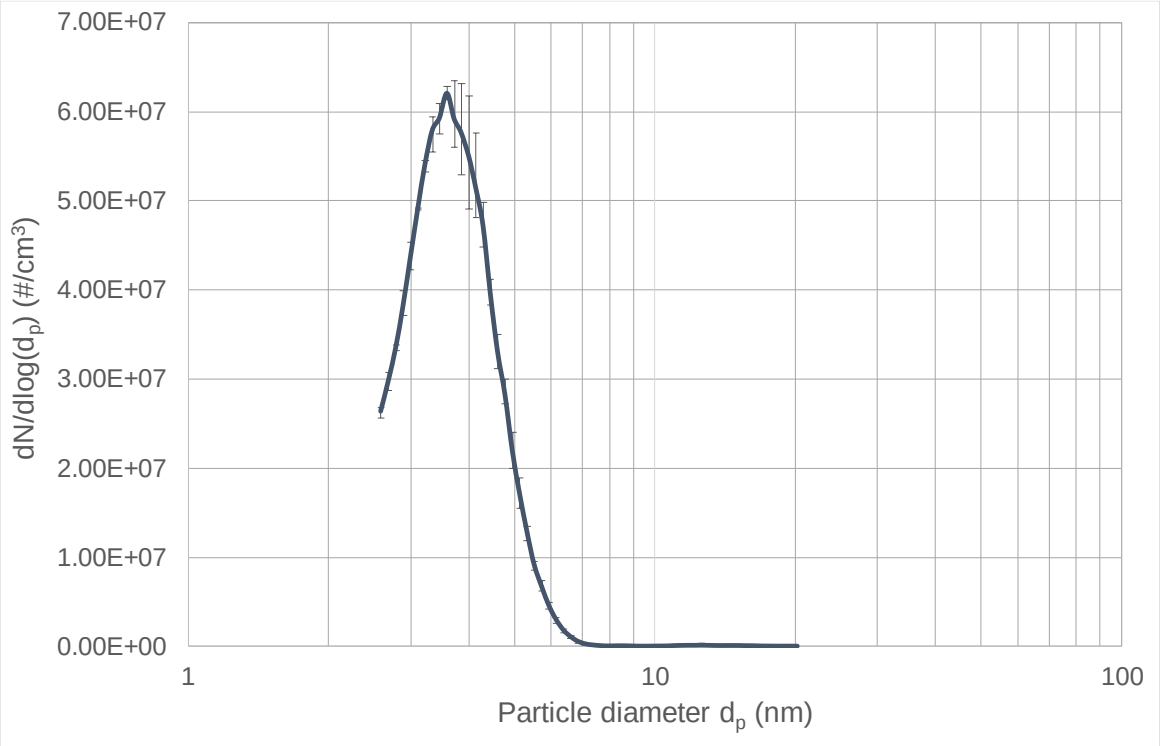

Figure 3: Particle size distribution of the NaCl test aerosol used to determine the deposition efficiency of the GJ type filter for 0.003 µm NaCl particles.

Table 1 lists the particle number concentrations in raw and clean gas and the particle counts in clean gas, respectively, of the 0.003 µm NaCl particles measured by the UCPC downstream

of the nanoDMA during the test with the GJ type filter. As the nanoDMA classifies only the monomobile positively charged particles, the concentration measured by the UCPC was divided by the charging probability of 0.003 µm particles (~ 1.1 %) to determine the total number of 0.003 µm particles present in raw and clean gas. These values, together with the deposition efficiency of the tested filter for this particle size can be found in *Table 1.*

Table 1 gives two values for the efficiency, i.e. one calculated from the measured particle counts (denominated “calculated”) and a second one taking into account the least favorable limit value of the 95 % two-sided confidence interval (denominated “minimum”) based on Poisson statistics, due to the low number of particles counted downstream of the filter. The calculation is carried out taking into account the particle counting statistics specified in DIN EN ISO 29463-2:2019-05 and is based only on pure counting data. The downstream concentration is based on the upper limit of the 95 % confidence range of the counted particles, while the upstream concentration is based on the lower limit of the 95 % confidence range of the counted particles.

The numbers of particles counted by the UCPC during each ~20 min clean gas measurement can be summed up for the tested filter and a deposition efficiency based on roughly one hour measurement can be calculated. This would correspond to 9 counts and a deposition efficiency of 99.9997 % ($E_{95\%}$ = 99.9992 %).

From *Table 1* it can be seen that the tested filter showed efficiencies >99.999 % (lower end of the 95 % confidence interval) for the 0.003 µm NaCl particles.

Table 1: Overview of the number concentration and counts of monomobile 0.003 µm NaCl particles classified by the nanoDMA and measured by the UCPC, of the total particle number in raw and clean gas and of the deposition efficiency determined for the tested GJ type filter for 0.003 µm NaCl particles.

Filter denomination customer/ Filter number IUTA	Raw gas		Clean gas				Efficiency	
	Concentration[1] (#/cm^3)*10^3	Particle number (#)*10^{13}	Time (s)	Counts UCPC[1] (#)	Concentration[1] (#/cm^3)*10^{-3}	Particle number (#)*10^7	Calculated (%)	Minimum[2] (%)
GJ M210315/010	1.13	1.09	1200	3	2.98	2.88	99.9997	99.9992
	1.15	1.11	1200	2	2.00	1.94	99.9998	99.9994
	1.11	1.08	1200	4	3.98	3.85	99.9996	99.9991

[1]The values refer only to the monomobile positively charged fraction of 0.003 µm particles behind the DMA
[2]The minimum value of the 95 % confidence interval

7. Summary

A single GJ type filter was tested with 0.003 µm NaCl particles. The filter was installed in a test rig according to DIN 71460-1/ISO/TS 11155-1. The size of the filter was adapted to the size of the test rig and the test flow rate was set in order to have the same face velocity as with a flow rate of 6.5 CMM through the whole filter.

A polydisperse aerosol with a geometric mean diameter of 3.6 nm and a geometric standard deviation of 1.3 was produced and the number of 0.003 µm particles both in raw and clean gas classified with a nanoDMA and counted with an UCPC.

The 0.003 µm NaCl particles removal efficiency of the tested filter GJ was >99.999 %.

Remark:

The test was conducted with one of the specimens of the Winix filter GJ type. According to the information provided by Winix, this filter type is installed in the Winix AUS-1250AZPU and AZPU370-HWT Air purifier models.

According to the information provided by Winix, which relies on the quality control and consistency of Winix's supply chain, each filter model mentioned in the following table corresponds to the same filter type (same fabric, geometry, size and pleating). The table also mentions the air purifier models in which the filters are installed and the corresponding maximum flow rate of the air purifier.

Filter model	Filter dimensions: length x width x height (mm^3)	Max. air-flow of product (CMM)	Filter geometry	Air purifier model
T	409 x 308 x 43	6.5	Rectangular	HR900 WINIX ZERO Pro
CAF-COS6				APEE443-HWK

Institut für Energie- und
Umwelttechnik e.V. (IUTA)

Dr. rer. nat. Ana Maria Todea
Responsible for the measurements

Dr.-Ing. Christof Asbach
Unit Head Air Quality & Filtration

Remarks according DIN EN ISO/IEC 17025:2018 (general criteria for the operation of testing laboratories):

1. The results are only valid for the tested filter samples.
2. Extracts of this measurement report and the method description are not allowed to be forwarded to a third party without permission of IUTA.
3. Retained filter samples are stored for one year.